ELECTRO INDUSTRIES

North America's Leader in ELECTRIC HEATING TECHNOLOGY

THE FUTURE OF HEATING IS

NORAIRE

AIR TO WATER HEAT PUMP SYSTEM

COOLING WITH CHILLED WATER

Intertek

H

+

NORAIRE HEAT & COOL + CONDENSING UNIT
(sold separately)

NORAIRE®
Air To Water Heat Pump System

At 200-300% efficient, the NorAire Air Source Heat Pump Boiler is one of the most economical ways to supply heated water to your radiant floor heat system and chilled water to a forced air system with one unit.

Call Today
800.922.4138
FAX: 763.295.4434

2150 West River St.
Monticello, MN 55362
sales@electromn.com

www.electromn.com

APPLICATIONS

Basements | Slab on Grade | Garages | Warehouses

Air source heat pumps have the ability to take advantage of free outside energy in the air, and bring it inside to heat and cool your home. Using the refrigerant vapor cycle, the NorAire system transfers the outside energy to water, which is efficiently distributed throughout your radiant floor heating systems.

The NorAire utilizes the "split refrigerant" process. The free energy from the outside air is transferred into refrigerant at the outdoor condenser. Using the refrigerant vapor cycle, the refrigerant becomes a high pressure gas which is easily moved to the inside of your home. A coaxial heat exchanger within the boiler cabinet continues the process by receiving the high pressure gas and exchanging its energy with the water circulating throughout your hydronic system.

With very little energy "wasted" in the process of capturing and transferring the energy to your floors, the NorAire system will yield an average annual operating efficiency of over 200%. This is over twice the efficiency of any fossil fuel boiler system. Achieve efficiencies close to a geothermal system without the expensive geothermal installation costs. This level of efficiency, combined with a competitive electric rate, gives you a clean, safe, and economical choice for your home's heating system.

Energy rebates may apply - please contact your utitlity provider for details.

FEATURES

- Easy installation for the trained professional
- WarmFlo® temperature control, monitors and anticipates the BTU needs of your home
- Optional built-in electric boiler backup for really cold days
- Compatible with most major heat pump brands
- Coaxial heat exchanger for highly efficient heat transfer from refrigerant to water

APPLICATIONS

- Primary heat source for your home, garage, or workshop with fan coil cooling
- Warehouses
- Patio homes
- Net Zero and Passive homes

PIPING DIAGRAM

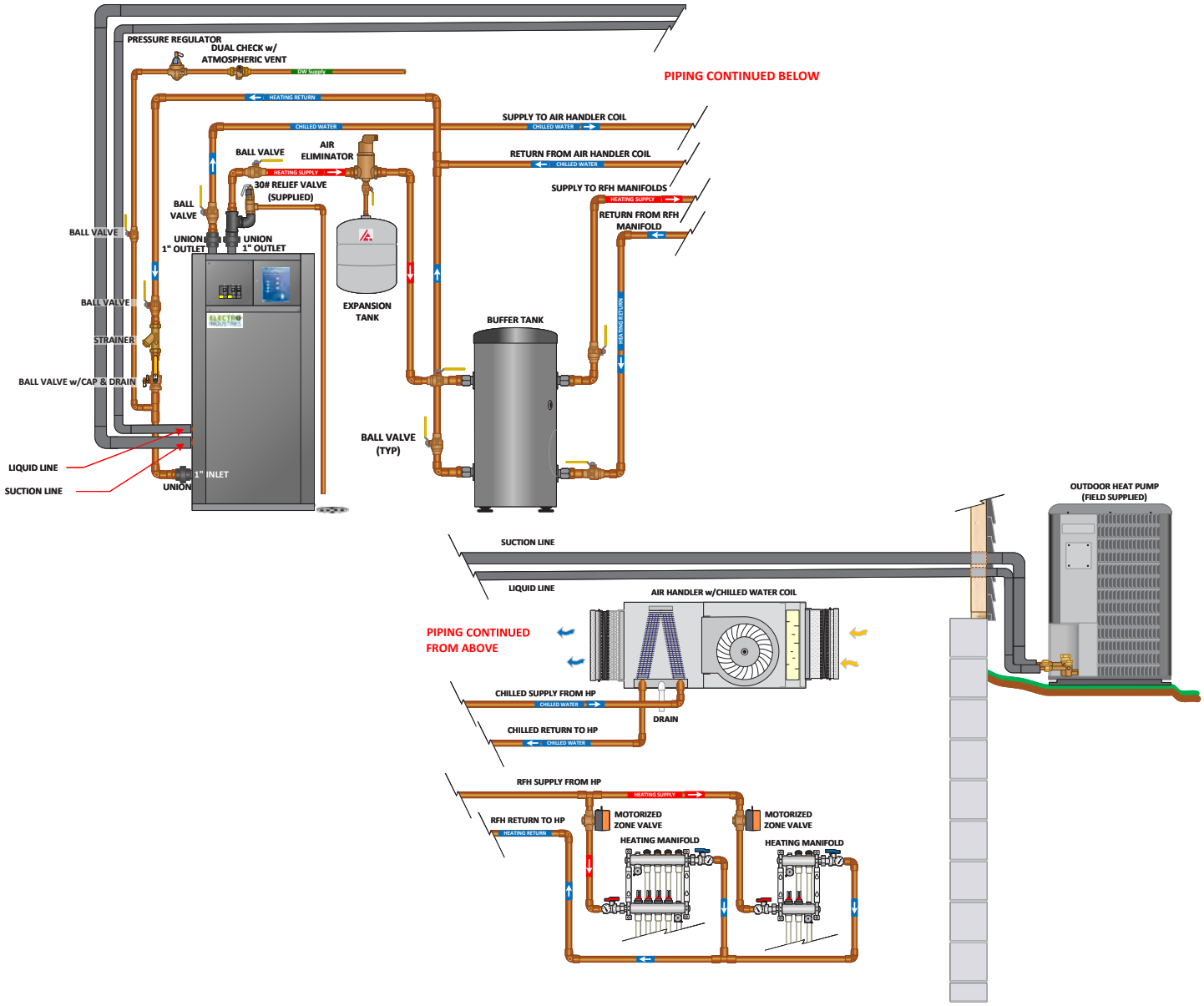

SPECIFICATIONS

Model	Volts/Phase	Tonnage	Auxiliary Electro Boiler kW	Btu/h Output	Total Amps
NC-FE-036-1-CPXX1-XX	208-240/1	3-ton	None	34,000	3
NC-FE-036-1-CPXX1-10	208-240/1	3-ton	10	34,000	45
NC-FE-048-1-CPXX1-XX	208-240/1	4-ton	None	48,000	4
NC-FE-048-1-CPXX1-10	208-240/1	4-ton	10	48,000	46
NC-FE-048-1-CPXX1-15	208-240/1	4-ton	15	48,000	67
NC-FE-060-1-CPXX1-XX	208-240/1	5-ton	None	57,000	5
NC-FE-060-1-CPXX1-15	208-240/1	5-ton	15	57,000	68
NC-FE-060-1-CPXX1-20	208-240/1	5-ton	20	57,000	89

*Request document NL207 for complete specifications.

ELECTRO INDUSTRIES

NORAIRE

AIR TO WATER HEAT PUMP SYSTEM IS THE FUTURE OF HEATING AND COOLING

To locate a contractor or distributor in your area, visit our website and click on Dealer Finder.

ELECTRO INDUSTRIES

Call Today
800.922.4138
FAX: 763.295.4434

2150 West River St.
Monticello, MN 55362
sales@electromn.com

www.electromn.com

Rev 05/07/2024 - NL202

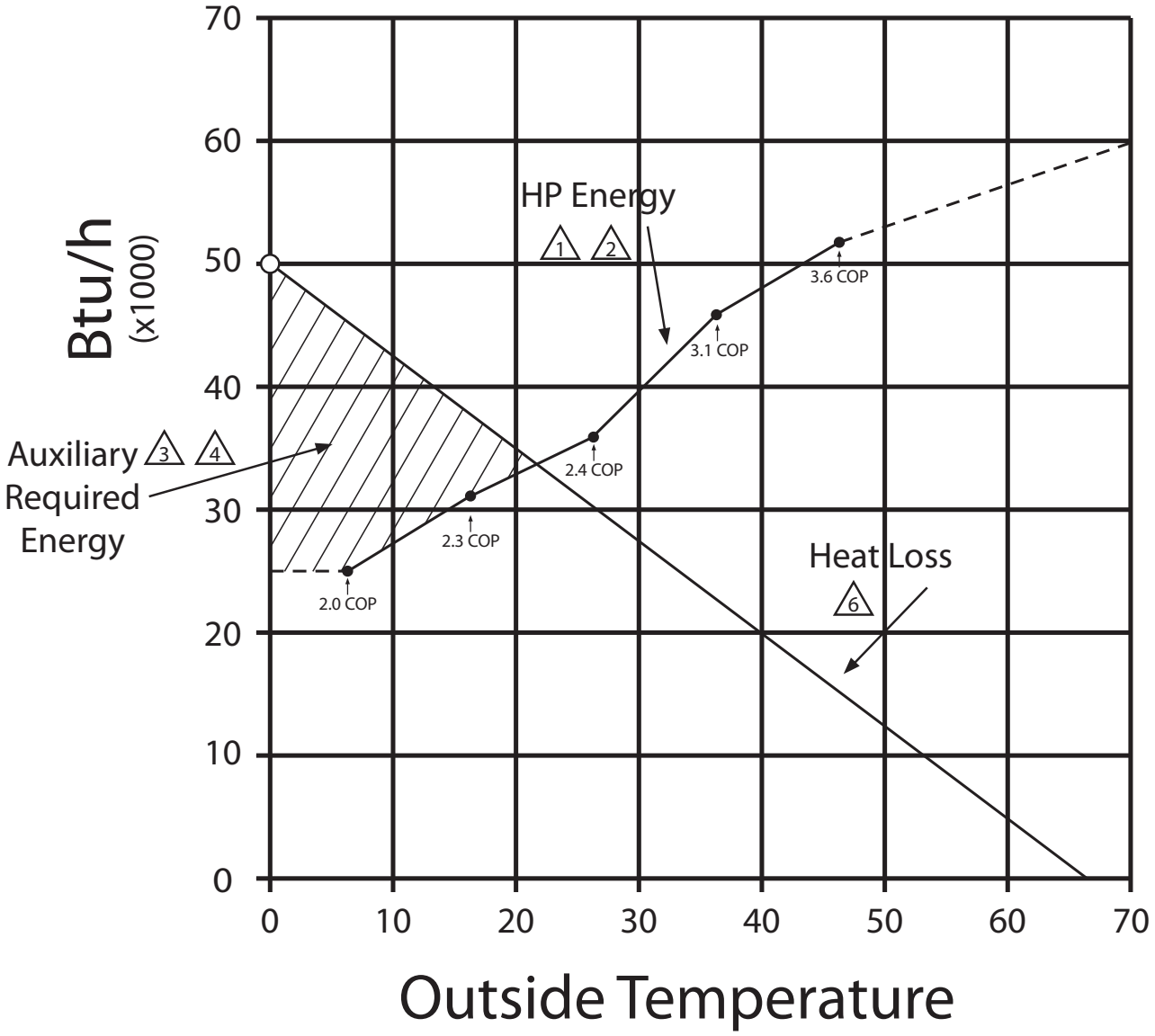

NorAire® 5-Ton, EI ODU Series

Notes:

1. 105° F supply water temperature
2. 14 GPM flow
3. Auxiliary - internal Electro-Boiler™
4. Supply sensing, stage 1 modulation from WarmFlo balance point to about 0° F
5. Additional 10 kW or 15 kW (stages 2-4) available, as required, for any colder conditions
6. Building heat loss, Btu/h requirement plotted against outside temperatures.
   Design - 0° F at 50,000 Btu/h, -20° F at 65,000 Btu/h (20 kW).

ART-338 2.0

NORAIRE BASIC SYSTEM HOOKUP
V2.0*

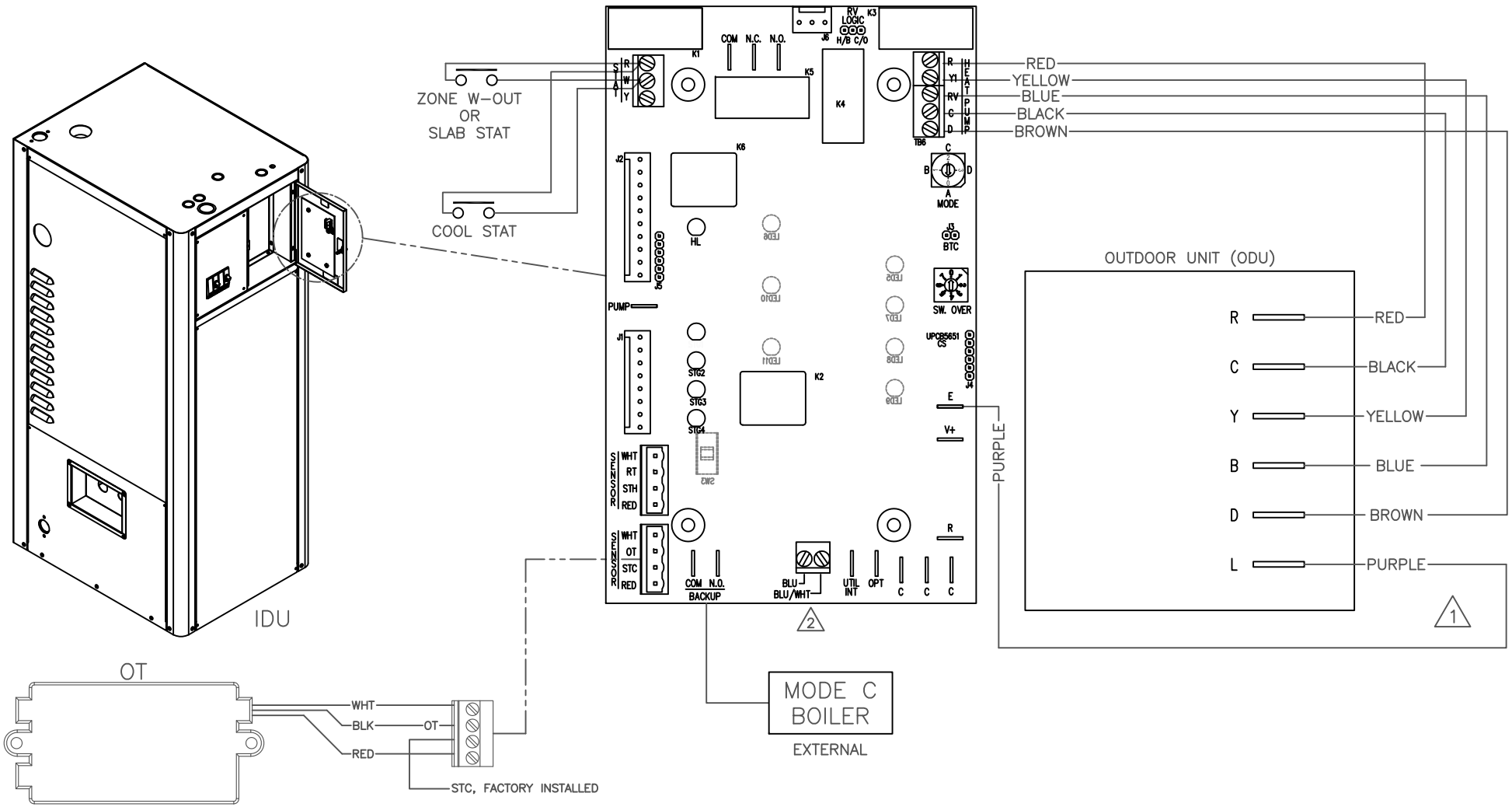

NOTES:

1. NOT AVAILABLE ON ALL ODU'S. SEE INSTALL MANUAL FOR CONNECTION USAGE- MUST NOT GO HIGH WITH DEFROST, ONLY CONNECT FOR BACK-UP HEAT DURING COMPRESSOR HARD LOCK-OUT.
2. WHERE APPLICABLE, REMOVE BLUE JUMPER, UTLITY CONTROL CONNECTION

ELECTRO INDUSTRIES, INC.
MONTICELLO, MN 55362

NH205 P1
Rev. 09 5-8-2012

NORAIRE - HP-BTC HOOK-UP V2.0*

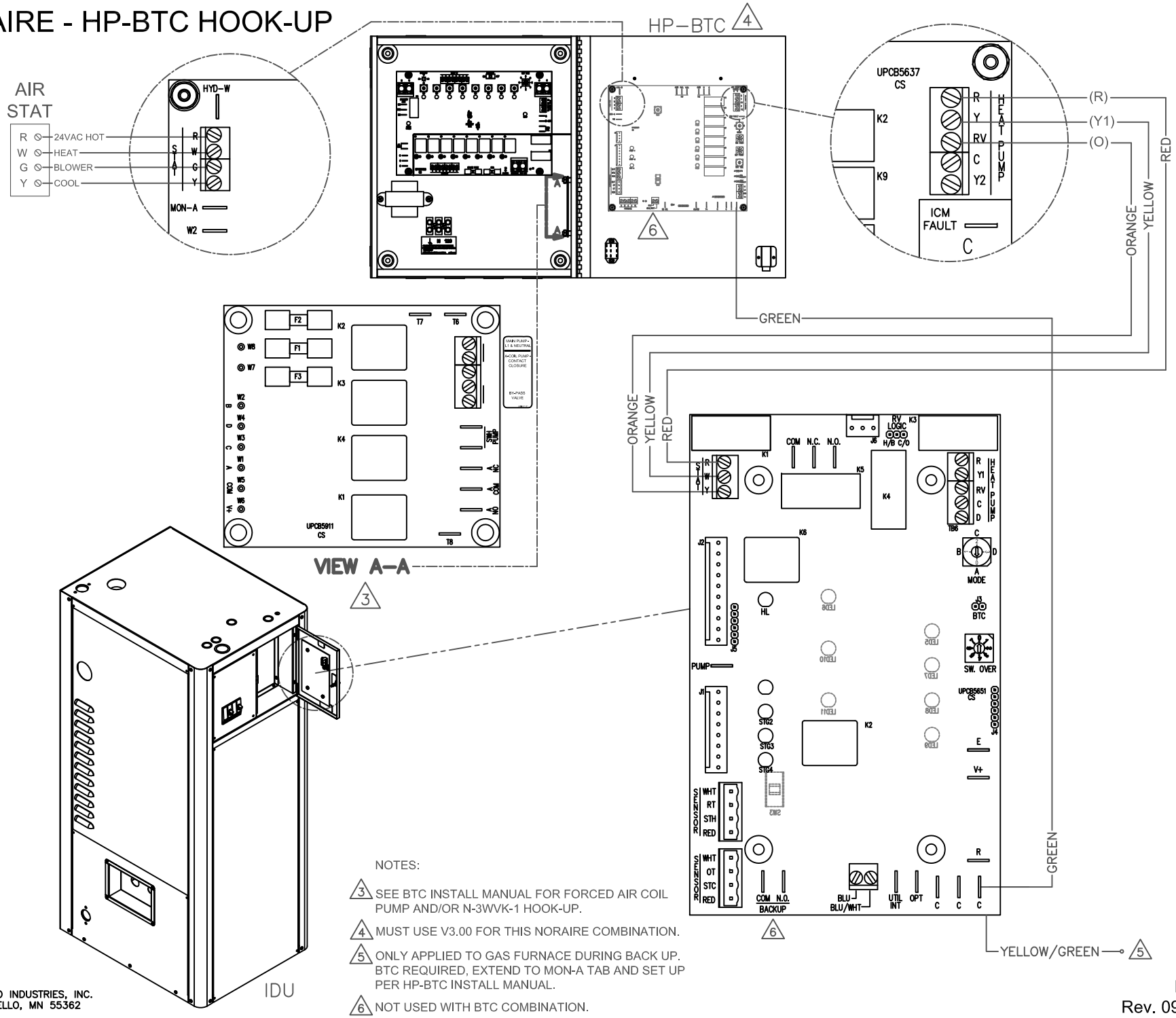

NOTES:

3. SEE BTC INSTALL MANUAL FOR FORCED AIR COIL PUMP AND/OR N-3WVK-1 HOOK-UP.
4. MUST USE V3.00 FOR THIS NORAIRE COMBINATION.
5. ONLY APPLIED TO GAS FURNACE DURING BACK UP. BTC REQUIRED, EXTEND TO MON-A TAB AND SET UP PER HP-BTC INSTALL MANUAL.
6. NOT USED WITH BTC COMBINATION.

ELECTRO INDUSTRIES, INC.
MONTICELLO, MN 55362

NH205 P2
Rev. 09 5-8-2012

NORAIRE
- HEATING MODE

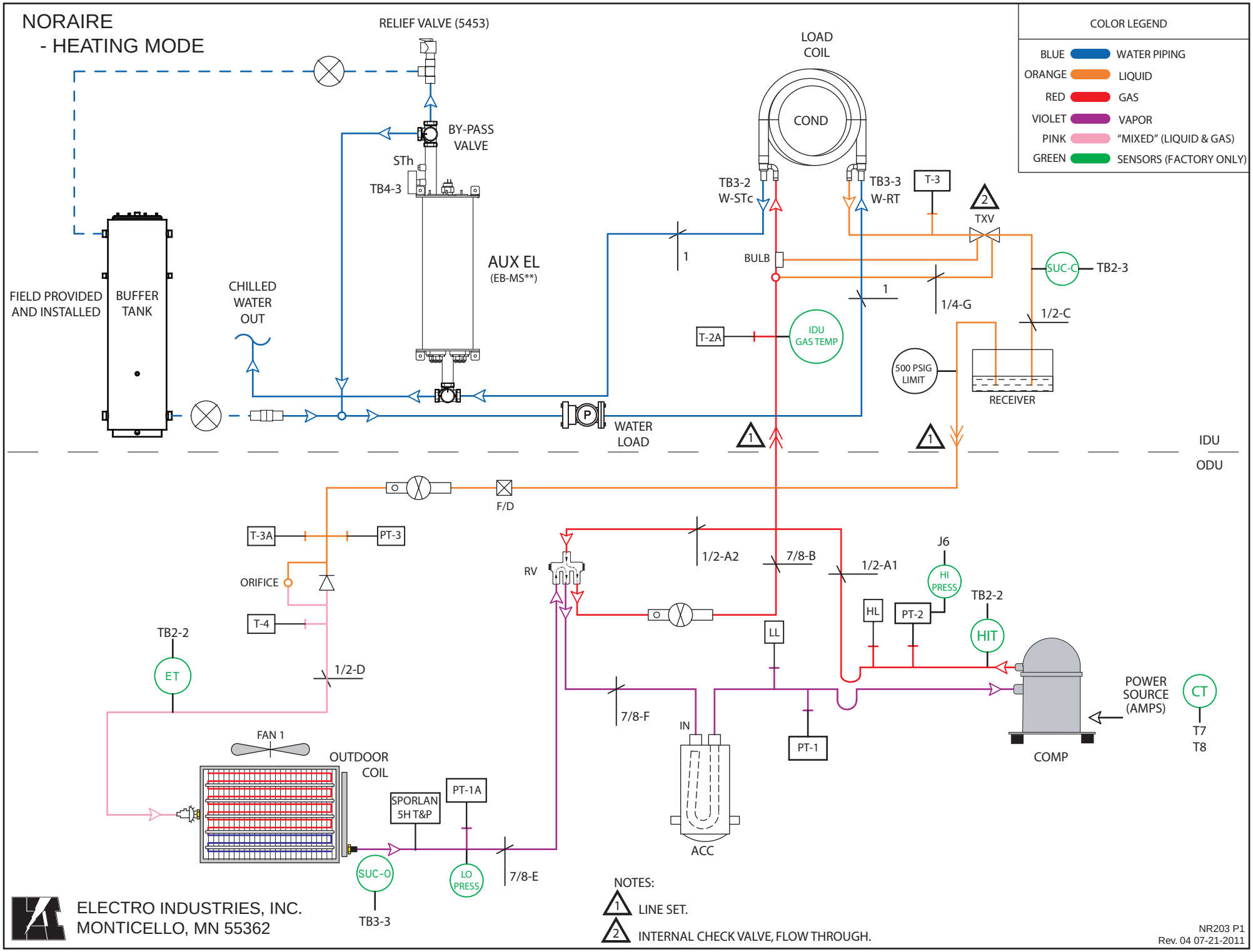

NORAIRE
- COOLING MODE

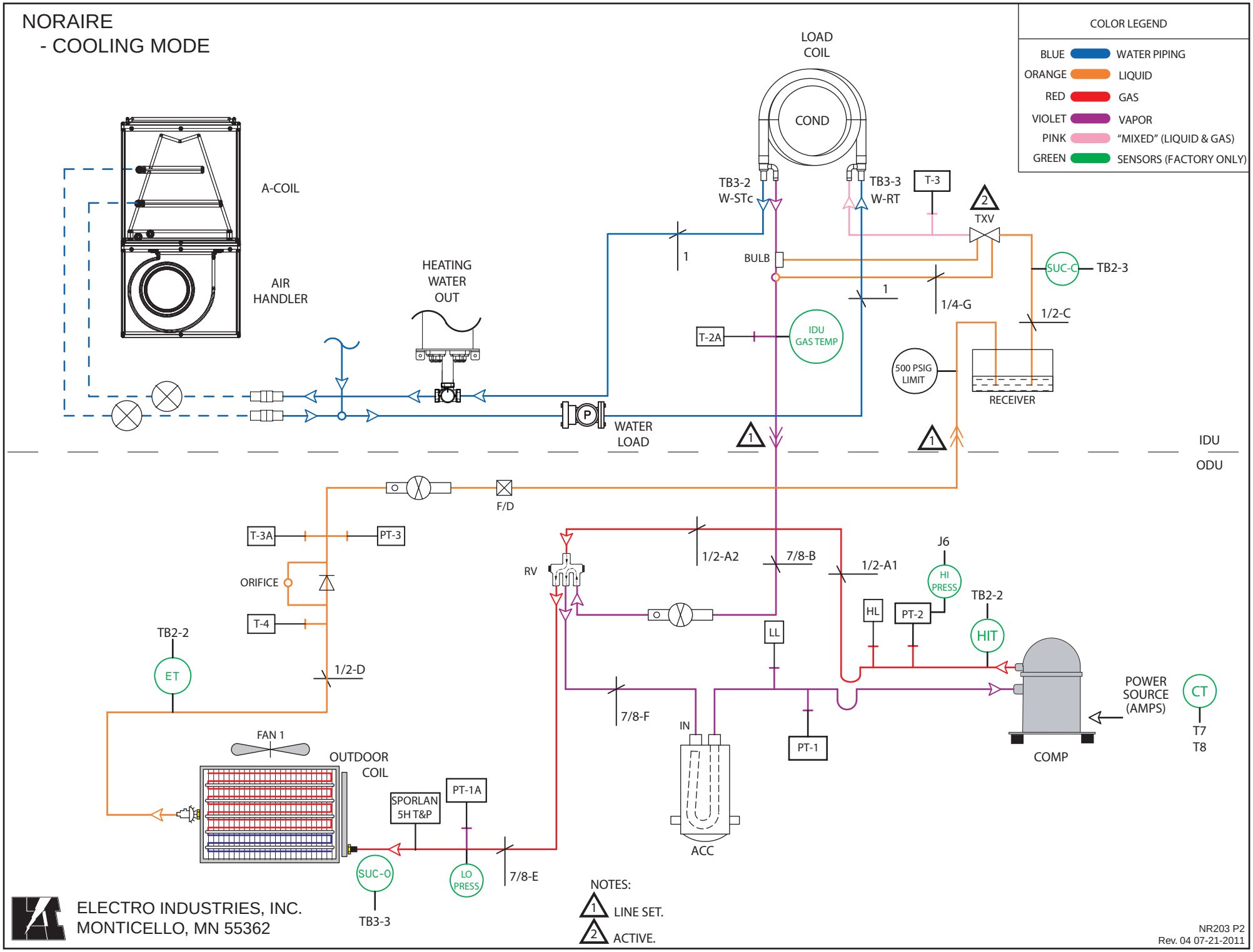

HX103 Application Drawings – Disclaimer

Not all Buffer Tank Controller/NorAire combinations shown in this drawing set are factory supported or considered “in production”.

Examples – pages 5, 10, and 11

ELECTRO INDUSTRIES
Monticello, Minnesota
800.922.4138
www.electromn.com

NorAire® Air to Water Heat Pump Application & Piping Suggestions

Reference HX103 Drawing Package

IDU Concept

1. Coax refrigerant to water heat exchanger connected to a generic air source outdoor heat pump (ODU).
2. However, each ODU supported by Electro Industries and this IDU must be tested and verified at Electro Heat Pump Test Facility (representative sample may be adequate).
3. Supplementary, auxiliary, or backup heating is supplied by an internally integrated and piped Electro-Boiler, typically EB-MS-** Series.
4. An internal 3-way valve bypasses chilled water ahead of the Electro-Boiler vessel. A special supply pipe is provided for chilled water output. When the system operating mode is forced air chilled water cooling, this 3-way valve follows the ODU reversing valve (RV).
5. The NorAire controller has a peg jumper to select ODU reversing valve control logic (high for cooling or heating). Factory default is high for heating.
6. Typical with heat pump hydronic applications, the forced air water coil is connected as a buffer tank outlet zone. This is **not** Electro's suggestion. With the NorAire (and NHP) concept the water coil source is directly from the refrigerant heat exchanger. With this arrangement the water coil will always receive either the hottest or the coolest water. In most configurations this also saves one pump.
7. However, the above arrangements provide some interesting control and pumping challenges. But these challenges are answered by Electro Buffer Tank Controller. Actually the HP-BTC-** provides very simple installation and wiring features. No extra relays, etc. are required.

Optional, Buffer Tank Controller (HP-BTC)

Literature sheet NL009, hookup drawing set NH205 and HX103 sheet 12 can provide additional evaluation and useful information.

User Guide

HX103 drawing set is an attempt to suggest workable piping and control possibilities. There certainly are other possibilities which could be a cross or combination of these various sheets. However, the descriptive phrases at each page top and associated notes need to be carefully considered when selecting a piping sheet and certainly also very important if there is a modification or cross between sheets. The following summary or indexing may help.

- Radiant heating only – sheet 1, 3
- Add forced air cooling – sheet 2, 4
- Heating buffer tank – sheet 4, 6, 7, 11
  - Cooling water coil must match HP Btu/h
  - Tank change-over not required
- Two buffer tank arrangement – sheet 5
- Zone valves – sheet 7
- Heating and cooling shared buffer tank – sheet 8, 9
  - Tank change-over required
- Radiant heating/forced air cool and heat – sheet 9, 10
- Radiant heating/forced air room terminal units – sheet 10
- Possible water heater buffer tank – sheet 11
- HP-BTC suggested – sheet 3, 4, 5, 6, 7; required – sheet 8, 9, 10, 11

Comment: Buffer tank method can be identified by studying the chilled water return pipe. Example, compare sheet 6 with sheet 8.

ELECTRO INDUSTRIES
Monticello, Minnesota
800.922.4138
www.electromn.com

NORAIRE AIR TO WATER HEAT PUMP

- Heating only - radiant floor
- One large zone
- Must size to match heat pump BTU/h

NOTE: AS SHOWN NORAIRE RECOMMENDS PRESSURE SYSTEM, SEE INSTALLATION MANUAL.

WARNING: THESE ARE SUGGESTED AND CONCEPT DRAWINGS. INSTALLER IS RESPONSIBLE FOR ALL EQUIPMENT, ADDITIONAL COMPONENTS, AND DETAILING REQUIRED BY LOCAL CODES.

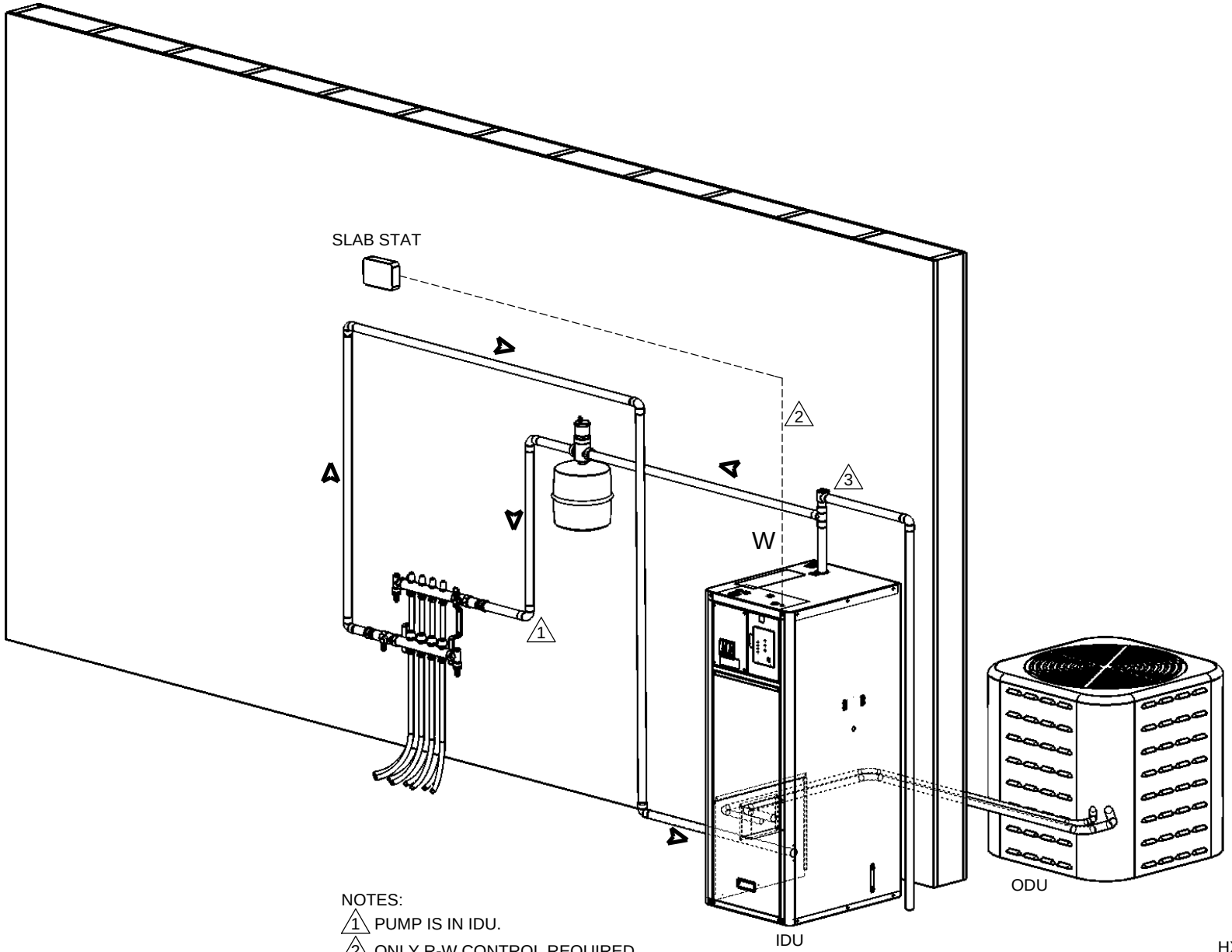

NOTES:

1. PUMP IS IN IDU.
2. ONLY R-W CONTROL REQUIRED.
3. RELIEF VALVE MUST HAVE PIPE TO FLOOR OR DRAIN.

ELECTRO INDUSTRIES, INC.
MONTICELLO, MN 55362

NORAIRE AIR TO WATER HEAT PUMP

- Add cooling forced air water coil, see sheet 1
- Must size to match heat pump BTU/h
- Water coil **not** configured for heating, water coil heating see sheets 9 & 10

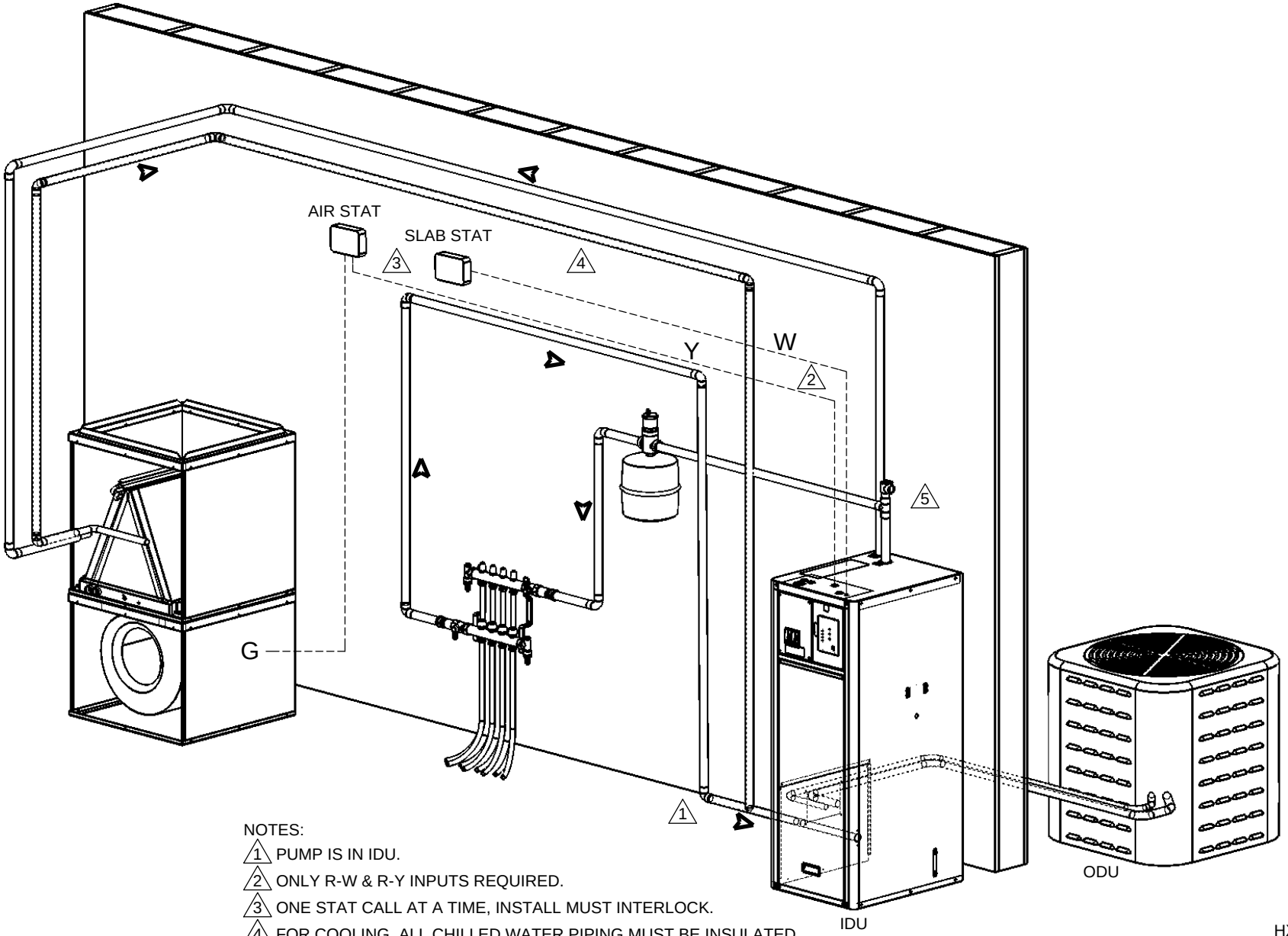

NOTES:

1. PUMP IS IN IDU.
2. ONLY R-W & R-Y INPUTS REQUIRED.
3. ONE STAT CALL AT A TIME, INSTALL MUST INTERLOCK.
4. FOR COOLING, ALL CHILLED WATER PIPING MUST BE INSULATED.
5. SEE P.1 FOR RELIEF VALVE.

ELECTRO INDUSTRIES, INC.
MONTICELLO, MN 55362

NORAIRE AIR TO WATER HEAT PUMP

- Heating only
- Using standard electric water heater as the tank.
- Suggest 35,000 BTUh maximum load capacity. For larger systems, must use sheet 6, type buffer tank.

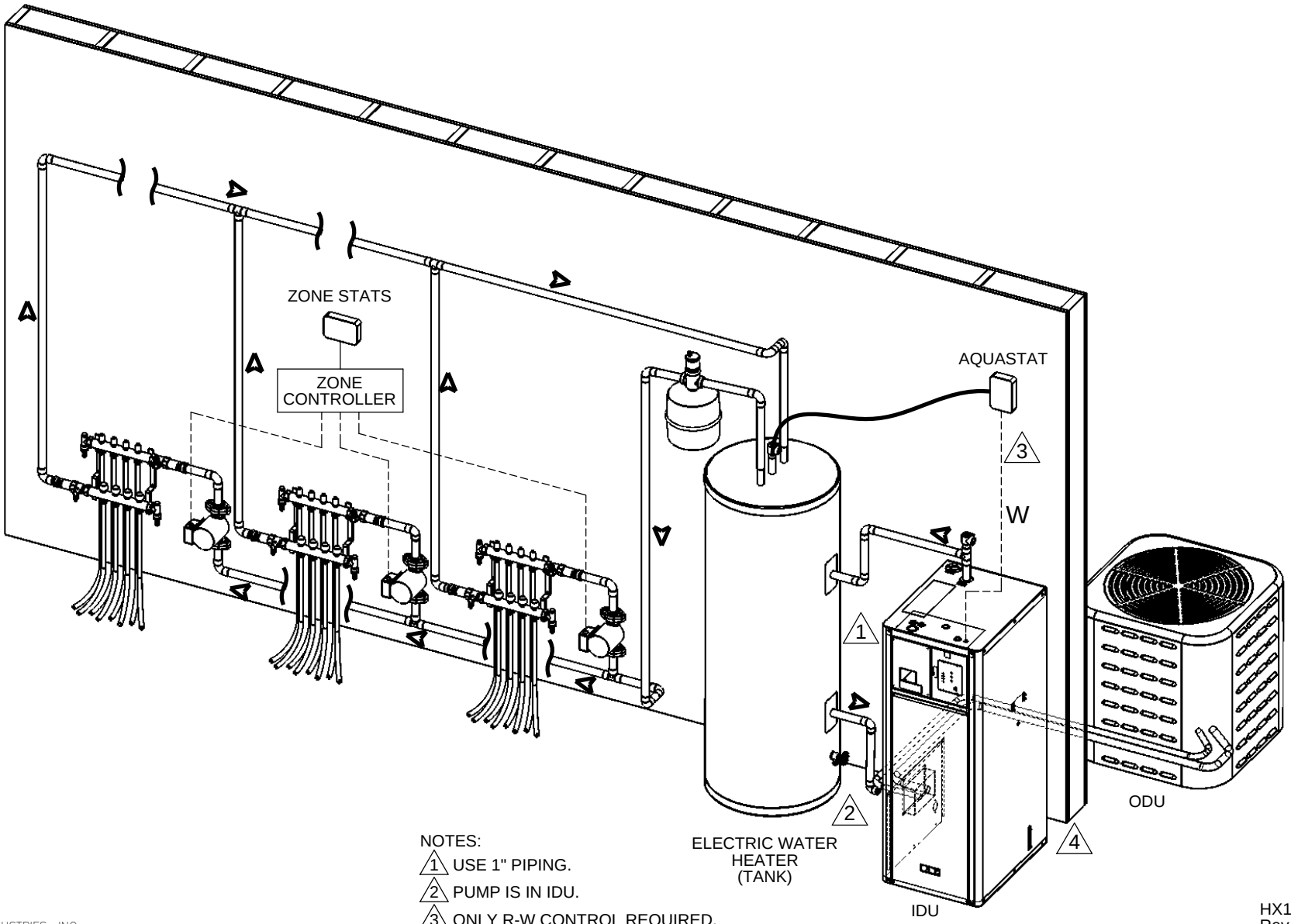

NOTES:

1. USE 1" PIPING.
2. PUMP IS IN IDU.
3. ONLY R-W CONTROL REQUIRED.
4. SEE P.1 FOR RELIEF VALVE.

ELECTRO INDUSTRIES, INC.
MONTICELLO, MN 55362

NORAIRE AIR TO WATER HEAT PUMP

- Add cooling forced air water coil, see sheet 3.
- Must size to match heat pump BTU/h
- Water coil not configured for heating, see sheets 9 & 10
- Heating uses standard electric water heater as the tank.
- Suggest 35,000 BTUh maximum load capacity. For larger systems, must use sheet 6, type buffer tank.

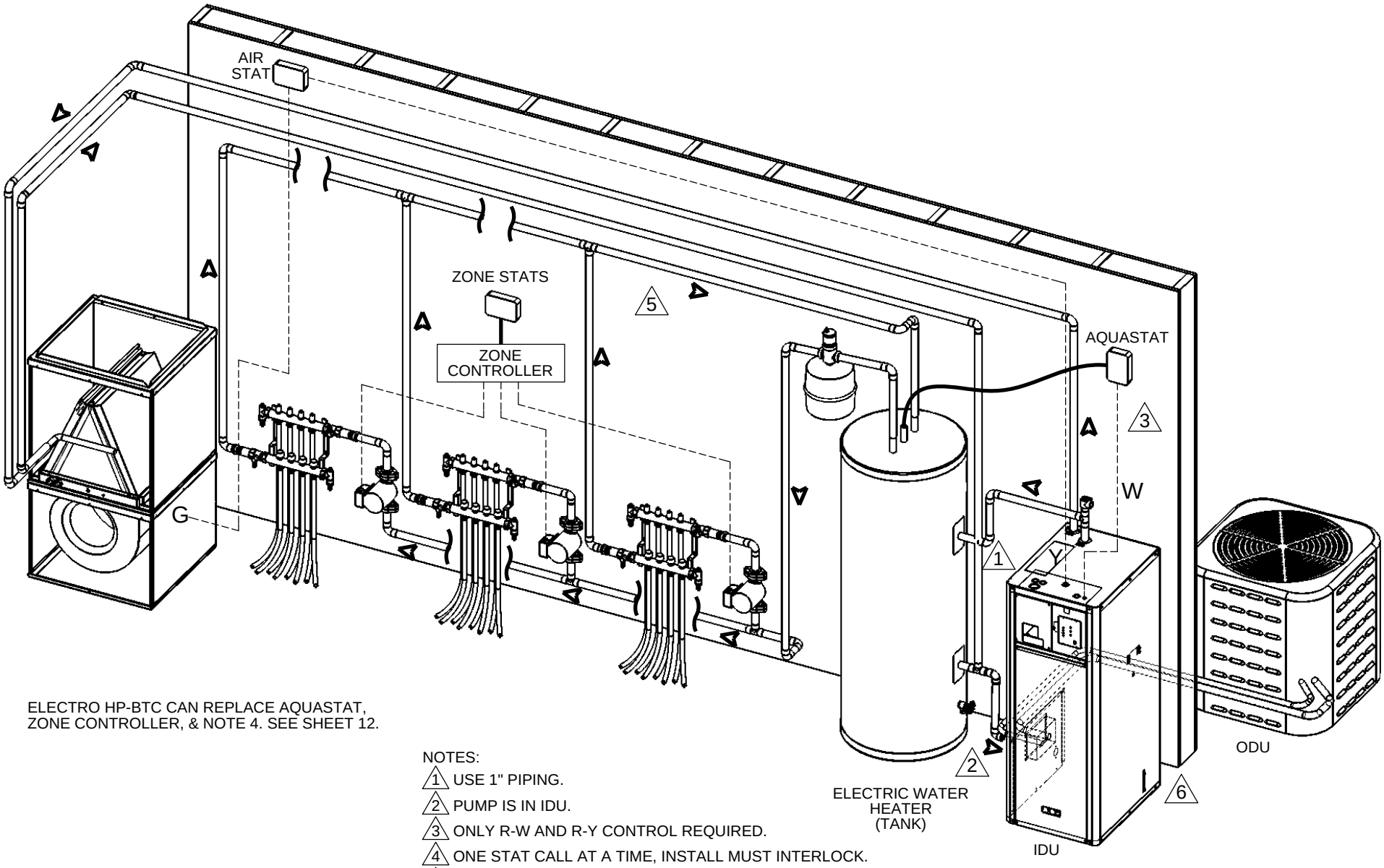

ELECTRO HP-BTC CAN REPLACE AQUASTAT, ZONE CONTROLLER, & NOTE 4. SEE SHEET 12.

NOTES:

1. USE 1" PIPING.
2. PUMP IS IN IDU.
3. ONLY R-W AND R-Y CONTROL REQUIRED.
4. ONE STAT CALL AT A TIME, INSTALL MUST INTERLOCK.
5. FOR COOLING, ALL CHILLED WATER PIPING MUST BE INSULATED.
6. SEE P.1 FOR RELIEF VALVE.

ELECTRO INDUSTRIES, INC.
MONTICELLO, MN 55362

NORAIRE AIR TO WATER HEAT PUMP

- Heating
- Using standard electric water heater as the tank.
- Suggest 35,000 BTUh maximum load capacity. For larger systems, must use sheet 6, type buffer tank.
- Cooling, 2nd tank, pressure water coil air handler (or furnace).
- Must use stainless steel tank and insulate all piping
- Undersized air coil or multiple air coils
- Water coil not configured for heating, see sheets 9 & 10

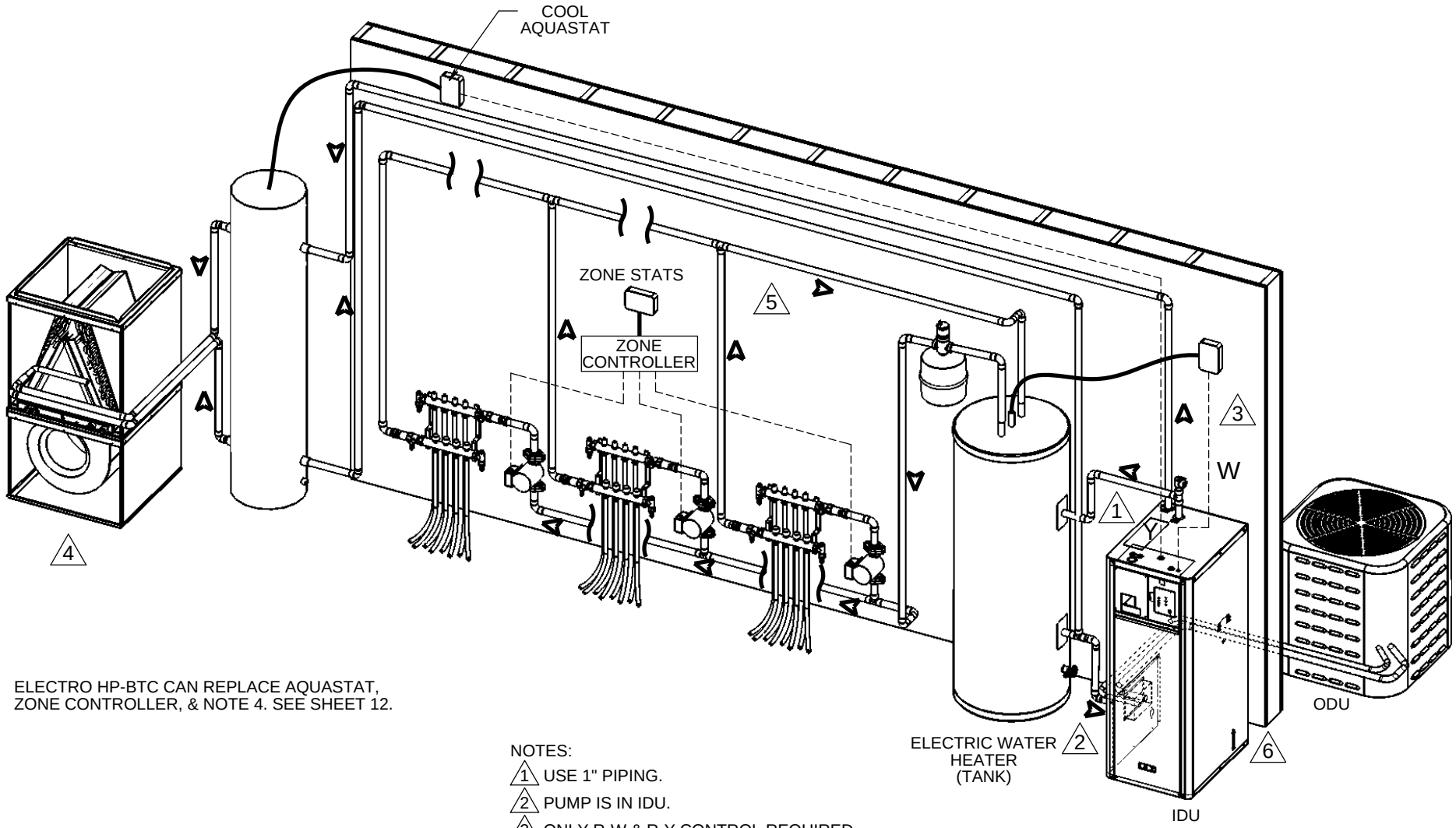

ELECTRO HP-BTC CAN REPLACE AQUASTAT, ZONE CONTROLLER, & NOTE 4. SEE SHEET 12.

NOTES:

1. USE 1" PIPING.
2. PUMP IS IN IDU.
3. ONLY R-W & R-Y CONTROL REQUIRED.
4. WHEN USING BTC MODE B , THIS CAN BE A GAS FURNACE.
5. FOR COOLING, ALL CHILLED WATER PIPING MUST BE INSULATED.
6. SEE P.1 FOR RELIEF VALVE.

ELECTRO INDUSTRIES, INC.
MONTICELLO, MN 55362

NORAIRE AIR TO WATER HP BUFFER TANK SYSTEM

- Heating - larger tank flow and piping (upgrade from sheets 3 & 4)
- Cannot use water coil for heating, see sheet 9 & 10
- Suggest using optional HP-BTC, see sheet 12
- HP-BTC can service 8 zones
- Cooling - water coil must be larger or match heat pump BTU/h
- See sheets 5-10 for undersized or multiple water coils

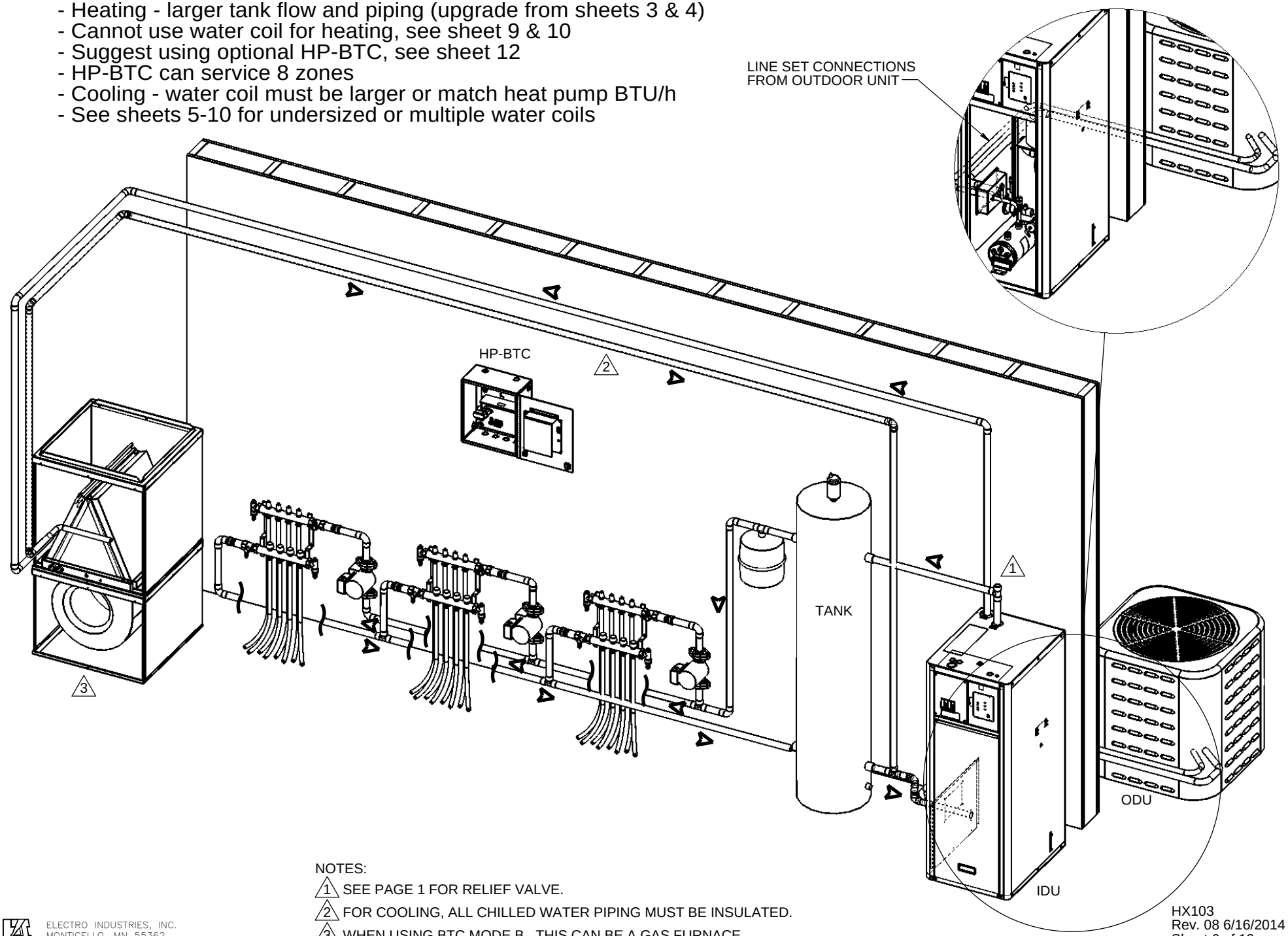

NOTES:

1. SEE PAGE 1 FOR RELIEF VALVE.
2. FOR COOLING, ALL CHILLED WATER PIPING MUST BE INSULATED.
3. WHEN USING BTC MODE B , THIS CAN BE A GAS FURNACE.

ELECTRO INDUSTRIES, INC.
MONTICELLO, MN 55362

NORAIRE AIR TO WATER HP BUFFER TANK SYSTEM

- Zone valve or actuators - 24V system
- Suggest HP-BTC-24
- See and read page 6, same application & notes

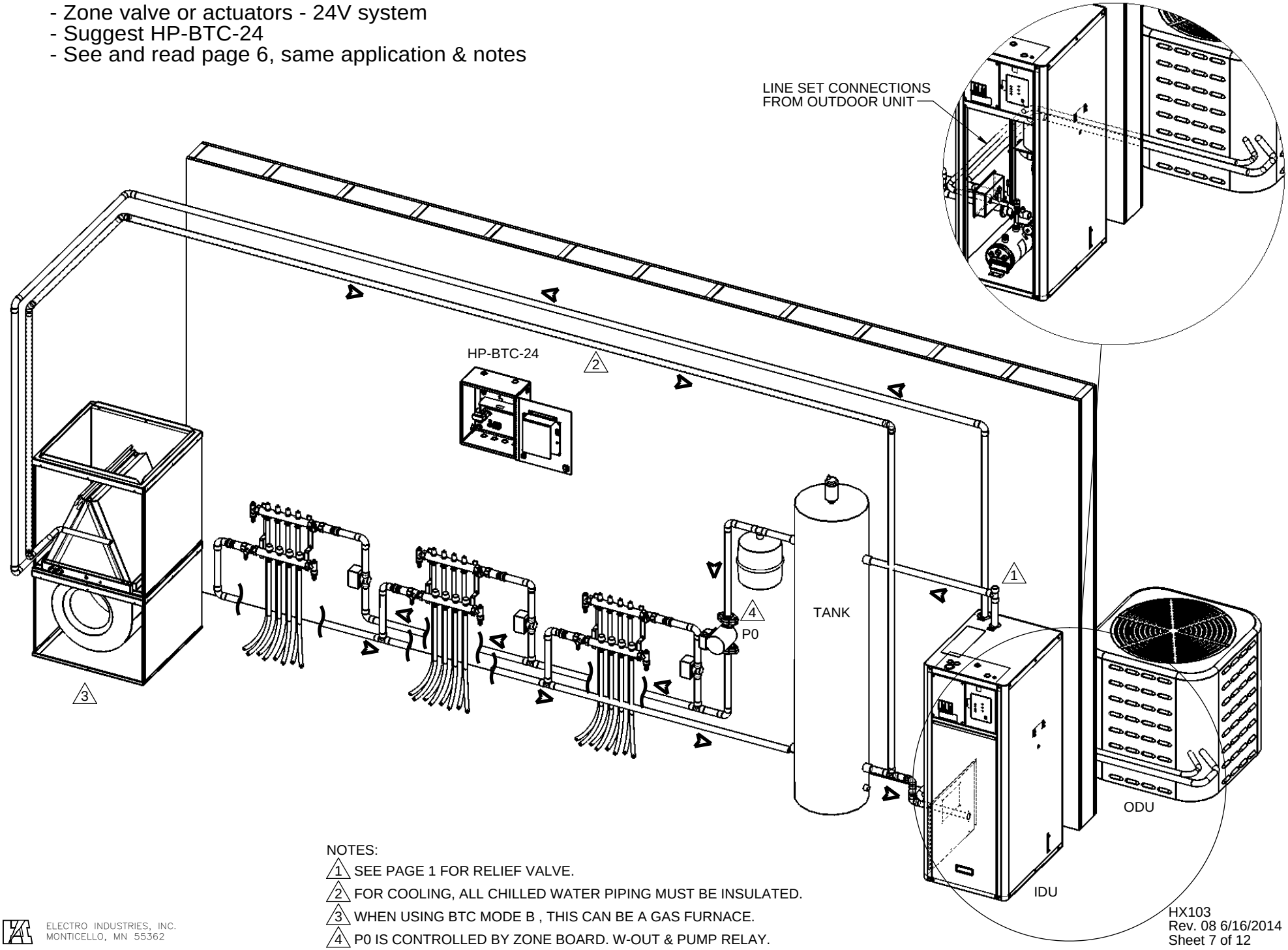

NOTES:

1. SEE PAGE 1 FOR RELIEF VALVE.
2. FOR COOLING, ALL CHILLED WATER PIPING MUST BE INSULATED.
3. WHEN USING BTC MODE B , THIS CAN BE A GAS FURNACE.
4. P0 IS CONTROLLED BY ZONE BOARD. W-OUT & PUMP RELAY.

ELECTRO INDUSTRIES, INC.
MONTICELLO, MN 55362

NORAIRE AIR TO WATER HP BUFFER TANK SYSTEM

- One tank, radiant heat & water coil cool
- As shown, **cannot** use water coil for heating, see sheet 9
- Water coil can be smaller than ODU max. cooling rating.
- HP-BTC controls tank auto **switch-over**, radiant heating to chilled water
- HP-BTC locks out radiant zones during cooling

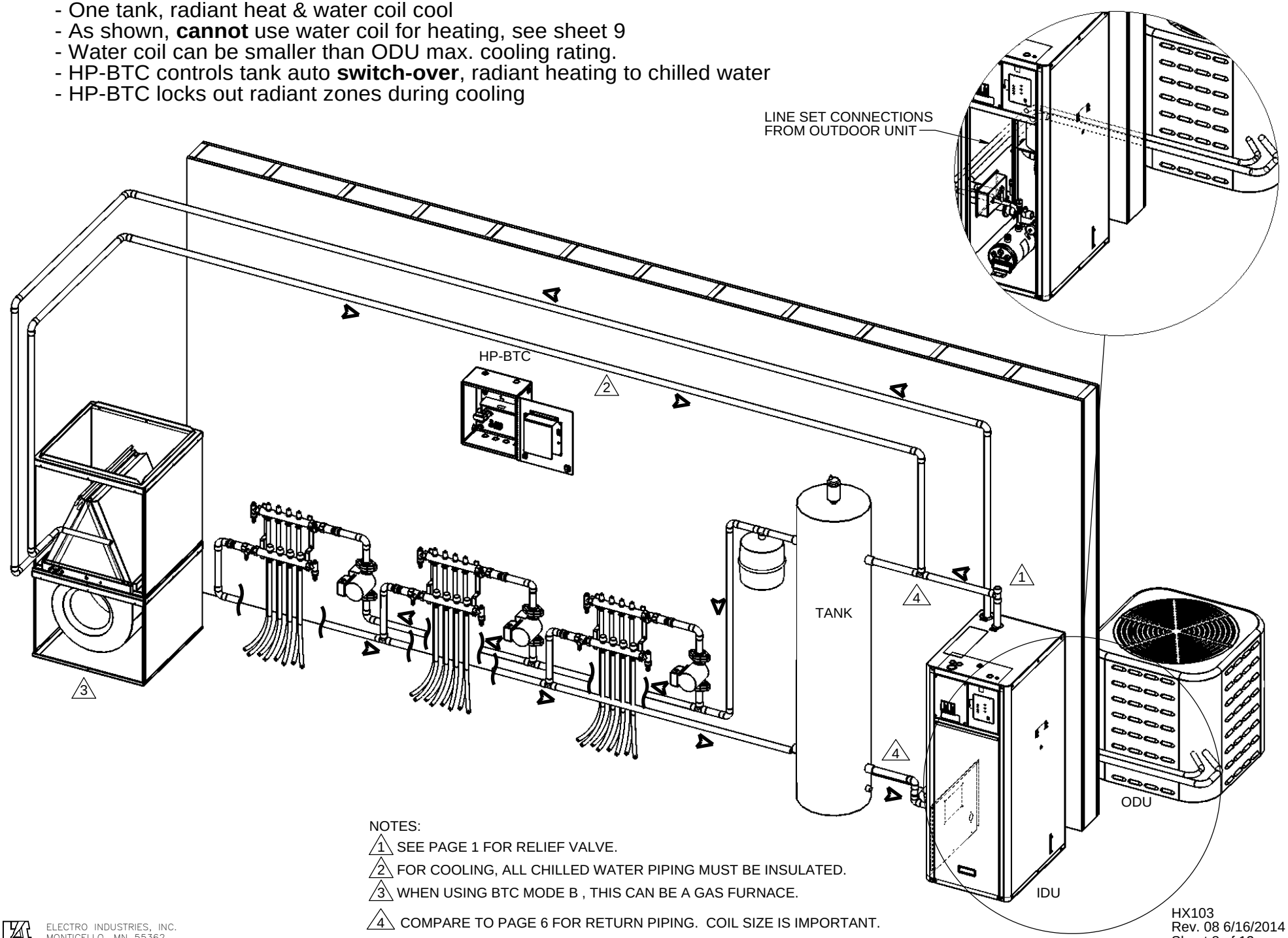

NOTES:

1. SEE PAGE 1 FOR RELIEF VALVE.
2. FOR COOLING, ALL CHILLED WATER PIPING MUST BE INSULATED.
3. WHEN USING BTC MODE B , THIS CAN BE A GAS FURNACE.
4. COMPARE TO PAGE 6 FOR RETURN PIPING. COIL SIZE IS IMPORTANT.

ELECTRO INDUSTRIES, INC.
MONTICELLO, MN 55362

NORAIRE WITH OPTIONAL 3-WAY VALVE WATER COIL KIT

- Heat & cool with forced air water coil, heat radiant floor
- Add 3-way valve kit (N-3WVK-1) and HP-BTC required. See sheet 12
- HP-BTC controls tank auto switch-over, heating to chilled water
- HP-BTC locks out radiant zones during cooling

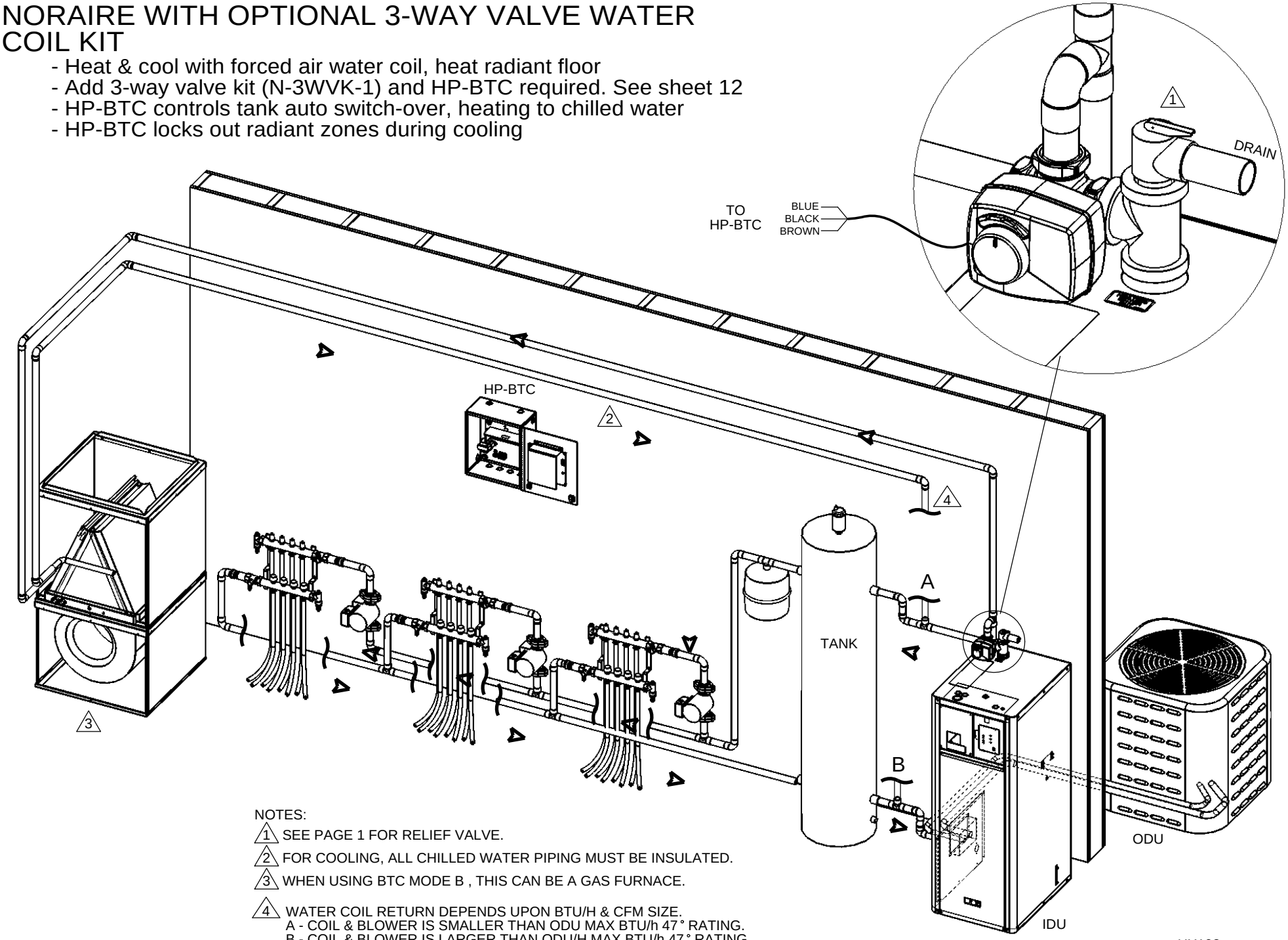

NOTES:

1. SEE PAGE 1 FOR RELIEF VALVE.
2. FOR COOLING, ALL CHILLED WATER PIPING MUST BE INSULATED.
3. WHEN USING BTC MODE B , THIS CAN BE A GAS FURNACE.
4. WATER COIL RETURN DEPENDS UPON BTU/H & CFM SIZE.
   A - COIL & BLOWER IS SMALLER THAN ODU MAX BTU/h 47° RATING.
   B - COIL & BLOWER IS LARGER THAN ODU/H MAX BTU/h 47° RATING.
   ALSO SEE SHEET 6 & 8.

ELECTRO INDUSTRIES, INC.
MONTICELLO, MN 55362

NORAIRE AIR TO WATER HEAT PUMP (DUAL FUEL)

-Add gas boiler, back-up. NorAire Mode C (NI203, P.19)
- Using standard electric water heater or hydronic tank
- If water heater, suggest 35,000 BTUh maximum load capacity. For larger systems, must use sheet 6, type buffer tank.
-NorAire B/U tab controls gas boiler R & W
  -After MU2 time out
  -OT temperature below SW OVER setting

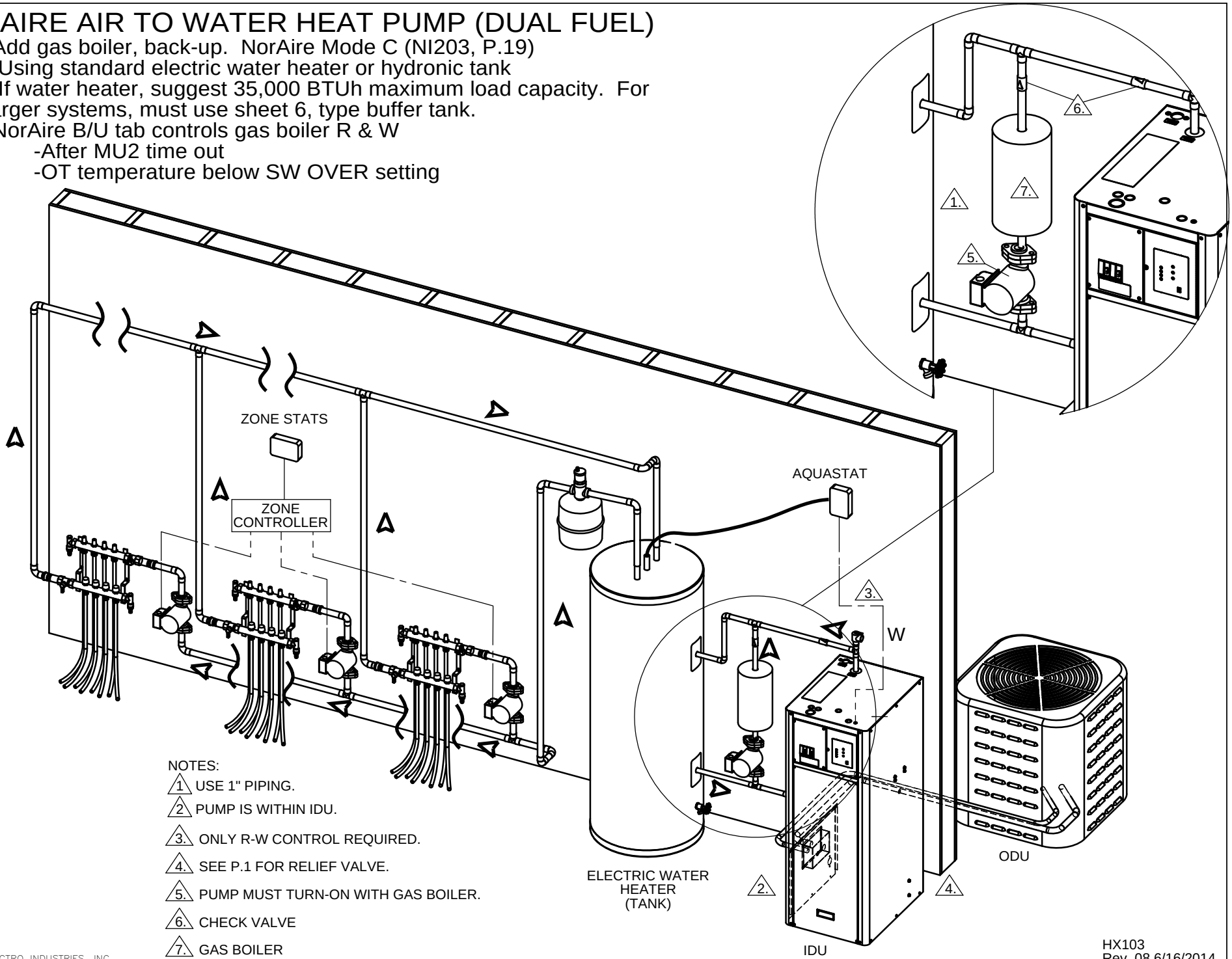

NOTES:

1. USE 1" PIPING.
2. PUMP IS WITHIN IDU.
3. ONLY R-W CONTROL REQUIRED.
4. SEE P.1 FOR RELIEF VALVE.
5. PUMP MUST TURN-ON WITH GAS BOILER.
6. CHECK VALVE
7. GAS BOILER

ELECTRO INDUSTRIES, INC.
MONTICELLO, MN 55362

NORAIRE AIR TO WATER HP BUFFER TANK AND WATER HEATER SYSTEM

- Heating - larger tank flow and piping
- Cannot use forced air water coil for heating, see sheet 9 & 10
- Must use HP-BTC, also HP-BTC can keep tank at 110˚F For WH coil, see sheet 12
- HP-BTC can service 8 zones
- Cooling - water coil must match heat pump BTU/h, see sheet 9
- See sheet 5 for undersized or multiple water coils

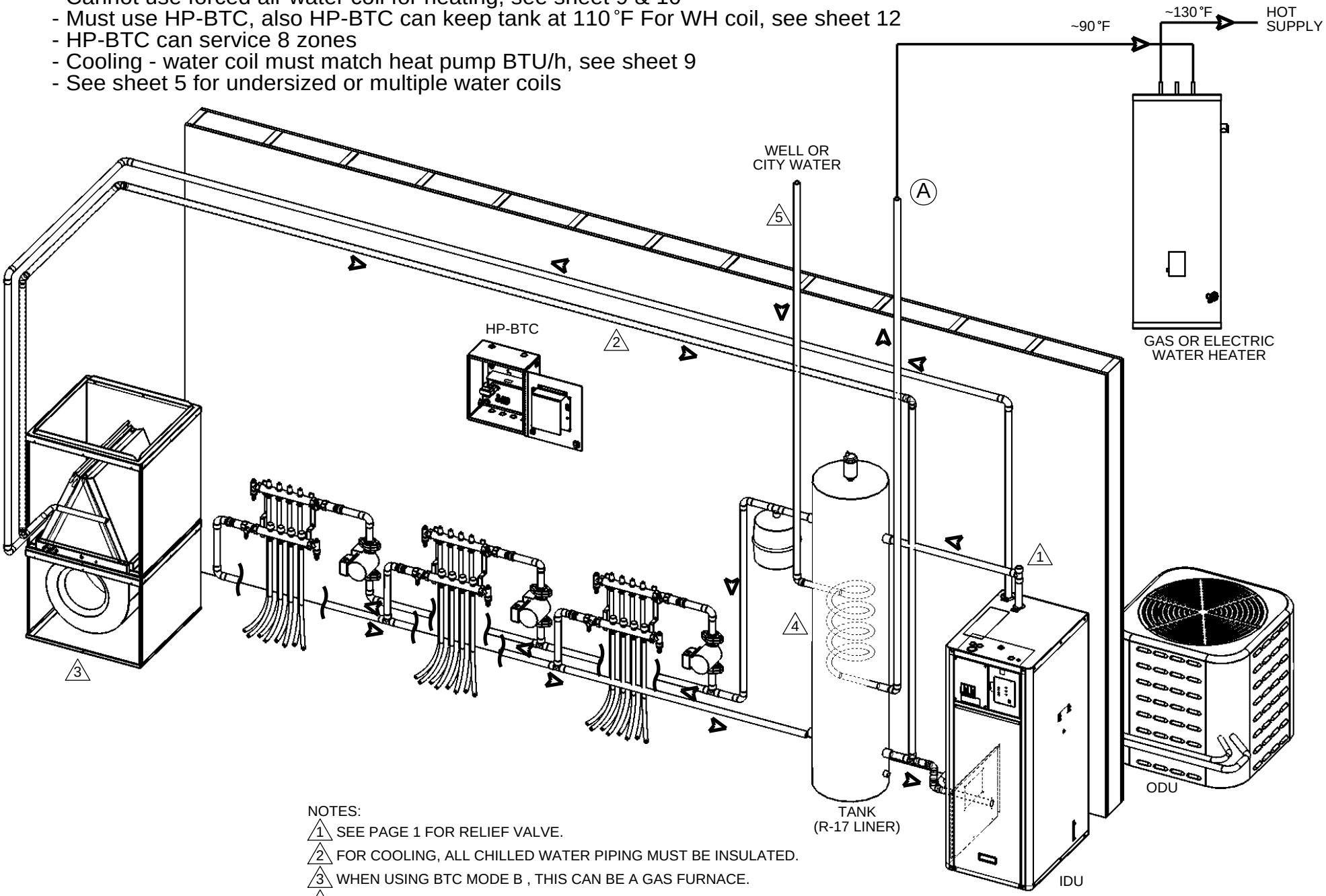

NOTES:

1. SEE PAGE 1 FOR RELIEF VALVE.
2. FOR COOLING, ALL CHILLED WATER PIPING MUST BE INSULATED.
3. WHEN USING BTC MODE B , THIS CAN BE A GAS FURNACE.
4. COIL MUST BE 150 PSIG RATED.
5. SOME LOCAL CODES MAY REQUIRE FLOW RESTRUCTURE.

ELECTRO INDUSTRIES, INC.
MONTICELLO, MN 55362

BUFFER TANK CONTROLLER (HP-BTC)

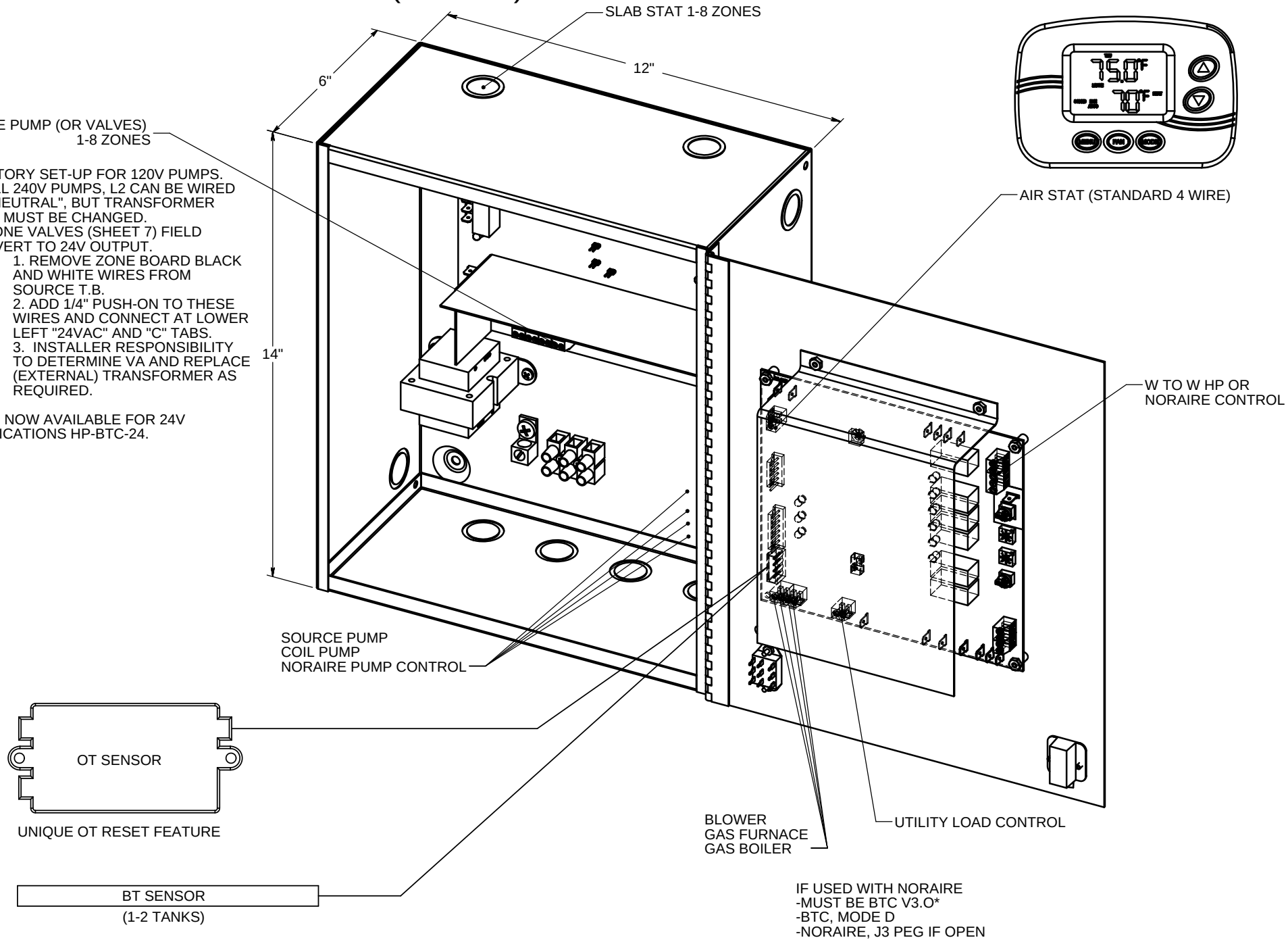

ELECTRO INDUSTRIES, INC.
MONTICELLO, MN 55362

ELECTRO INDUSTRIES

Monticello, MN · 800.922.4138 · www.electromn.com

08/21/2023 NL203